MCKJQ series

COMPACT CYLINDER WITH NON-ROTATING ROD

mindman

Special spec

Technical data

Caution for safety
(Read before installing)

Features

- The profile designs are based on MCJQ.
- Hexagonal rods for non-rotating feature.
- Anodised aluminum tubes provide better corrosion and abrasion resistance.
- Stainless Steel rods for better corrosion resistance.

Specification

Model		MCKJQ					
Acting type		Double acting					
Tube I.D. (mm)		12	16	20	25	32	40
Port size		M5×0.8				Rc1/8	
Medium		Air					
Operating perssure range		0.1~1 MPa		0.8~1 MPa		0.6~1 MPa	
Proof pressure		1.5 MPa					
Ambient temperature		-5°C~+60°C (No freezing)					
Available speed range		50~500 mm/sec					
Rod non-rotating accuracy		±1°	±0.7°		±0.5°		
Allowable rotational torque (kgf-cm)		0.4	2	2.5		4.5	
Sensor switch (*2)	RCE, RCE1	(*1)		●	●	●	●
	RDEP	●	●	–	●	–	●

*1. ø12, ø16: only applicable to RDE and RDE1E.
*2. RCE, RCE1, RDEP specification.
*3. The cylinder is allowed little leakage. Before delivery, it has passed the standard of leakage test.

Table for stroke

Tube I.D.	Standard stroke	Long stroke
ø12, 16	5,10,15,20,25,30	–
ø20, 25 (*1)	5,10,15,20,25,30,35,40,45,50	75,100
ø32, 40	↑ 75, 100	–

*1. Using long stroke type body when the cylinder stroke is longer than 51 mm.
*2. Please contact us if the stroke is out of specification.

Tightening torque

Tube I.D.	Rod thread	Tightening torque (kgf·cm)
ø12	M5×0.8	22.8
ø16	M6×1.0	41
ø20	M8×1.25	100
ø25	M10×1.25	190
ø32,40	M14×1.5	540

* Make sure the tightening torque of rod thread does not exceed the value above.
* The tolerance of tightening torque is ±5%.

Order example

MCKJQ — 12 — 20 — 25 M — F — G

MODEL

1: Single rod

TUBE I.D.

STROKE

M: Magnet

PORT THREAD

Blank: M5×0.8
(for ø12~ø25)
Blank: Rc thread
G: G thread
NPT: NPT thread
(for ø32, ø40)

STYLE

Code		Symbol	Description
1	1		Double acting / Male thread
1	2		Double acting / Female thread

TYPE

Code	Description
Blank	Standard
F	Rear flange (for standard stroke)
L	Piston rod extended to 10 mm (for tube I.D. ø40 standard stroke). For adding LB and FAC accessories
N2*	Front mounting holes enlarged

* Please confirm the mounting method before purchase and contact us if it is A mounting method. (Refer to "Plate mounting methods").

Caution

Please don't attempt to rotate the piston rod.

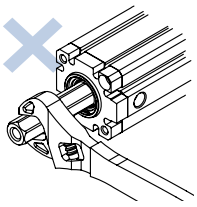

Accessories

	Accessories			
Code	LB *1 (Purchase 2 pcs)	CB	FAC *1	FBC
Mounting / Tube I.D.				
ø40	LB-J1-40	CB-J1-40	FAC-J1-40	

*1. Within the standard stroke, LB and FAC must be used with the L type (as the piston rod needs to be extended by 10 mm). See previous page for stroke range.
*2. The mounting accessories only for tube I.D. ø40.
*3. Refer to MCJQ dimension.

Pin

Applicable	CB accessories
Code	PIN-CB-P (With snap ring)
Fig / Tube I.D.	
ø40	PIN-J1-32-1-P

Order example of self-assembled

The tube I.D. ø40 of LB accessories with stroke 25mm.

No.	Order number	Qty
1	LB-J1-40	2
2	MCKJQ-12-40-25-L	1

* To order accessories/cylinder, please place orders separately according to the order codes in the above table. Please refer to the previous page for the cylinder ordering method.

Rod nut

Code	NUT
Fig / Tube I.D.	
ø12	NUT-M5x0.8x4Hx8B
ø16	NUT-M6x1.0x5Hx10B
ø20	NUT-M8x1.25x5Hx13B
ø25	NUT-M10x1.25x6Hx17B
ø32	NUT-M14x1.5x8Hx22B
ø40	

Cylinder weight

Standard stroke

Unit: g

Model		Basic weight MCKJQ-11	Basic weight (magnet) MCKJQ-11	Stroke 5mm MCKJQ-11	Basic weight MCKJQ-12	Basic weight (magnet) MCKJQ-12	Stroke 5mm MCKJQ-12
Tube I.D.	Stroke range (mm)	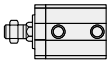	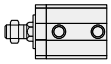	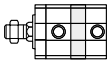			
ø12	5~30	38	46	7	36	44	7
ø16		55	66	9	50	61	9
ø20	5~50	100	130	14	93	123	14
ø25		150	189	18	137	176	18
ø32	5~100	231	283	22	200	252	22
ø40		250	315	23	219	284	23

Long stroke

Unit: g

Model		Basic weight MCKJQ-11	Basic weight (magnet) MCKJQ-11	Stroke 5mm MCKJQ-11	Basic weight MCKJQ-12	Basic weight (magnet) MCKJQ-12	Stroke 5mm MCKJQ-12
Tube I.D.	Stroke range (mm)			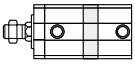			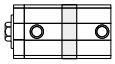
ø20	51 or more	308	312	14	301	305	14
ø25		398	407	16	390	399	16

* The weight is based on 51 mm stroke.

Standard stroke ø12~ø32

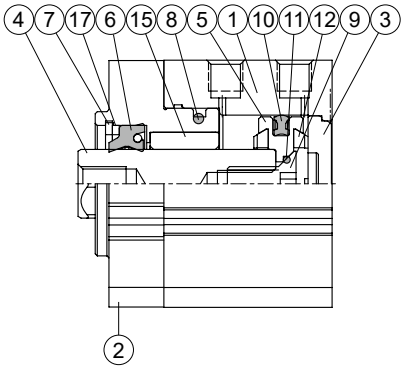

Standard stroke ø12~ø32
(with magnet)

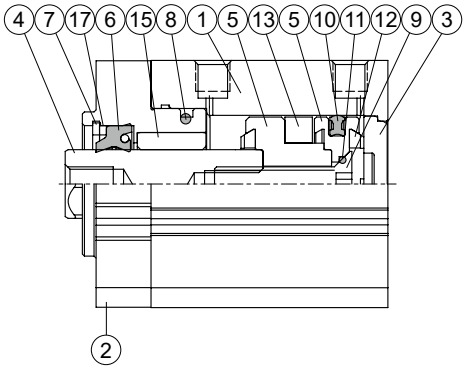

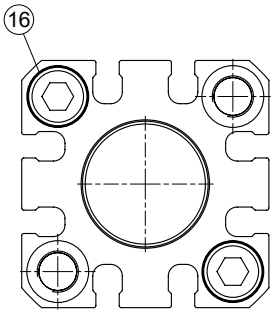

Standard stroke ø40

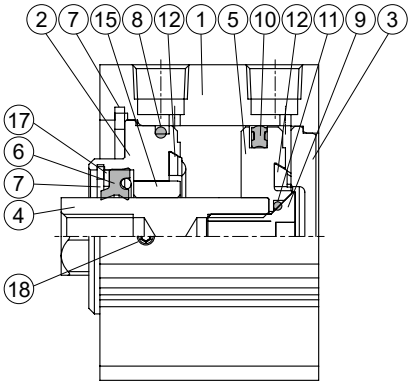

Standard stroke ø40
(with magnet)

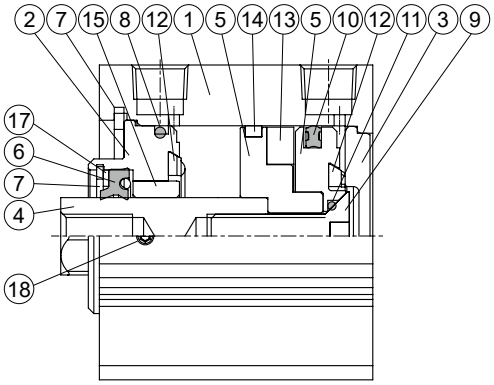

Standard stroke – Material

No.	Tube I.D. / Part name	12	16	20	25	32	40	Q'y	Repair kits (inclusion)
1	Body	Aluminum alloy						1	
2	Rod cover	Aluminum alloy						1	
3	End cover	Aluminum alloy						1	
4	Piston rod	Stainless steel						1	
5	Piston	Aluminum alloy						1	
6	Rod packing	NBR						1	●
7	Snap ring	Spring steel						1	
8	Cover ring	NBR						1	●
9	Piston bolt	Stainless steel					SCM	1	
10	Piston packing	NBR						1	●
11	Piston gasket	NBR						1	●
12	Cushion packing	NBR						2	●
13	Magnet ring	Magnet						1	
14	Wear ring	–				Resin		1	
15	Bush	Bearing alloy						1	
16	Bolt	Carbon steel					–	2	
17	Washer	Carbon steel						1	
18	Set screw	–					*1	1	

*1. Alloy steel

Order example
Repair kits

Tube I.D.	Repair kits
ø12	**PS-MCKJQ-12**
ø16	**PS-MCKJQ-16**
ø20	**PS-MCKJQ-20**
ø25	**PS-MCKJQ-25**
ø32	**PS-MCKJQ-32**
ø40	**PS-MCKJQ-40**

Long stroke ø20, ø25

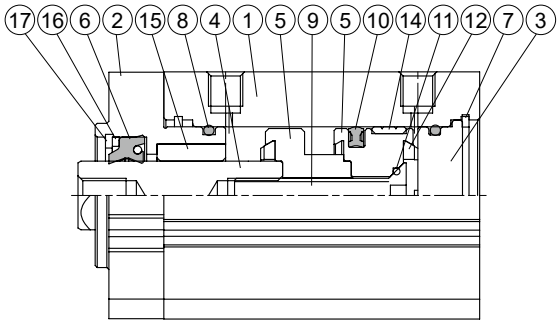

Long stroke ø20, ø25
(with magnet)

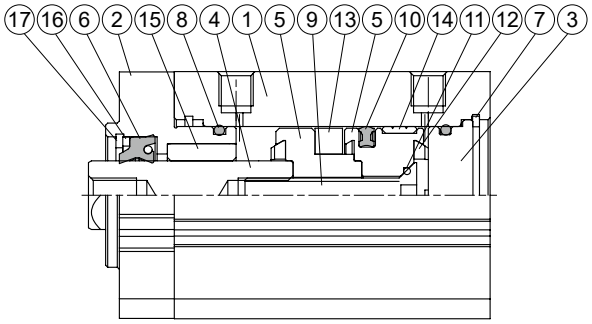

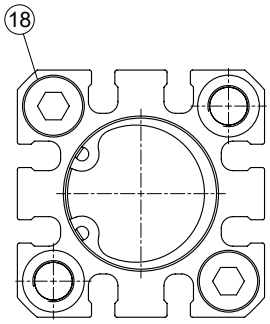

Long stroke – Material

No.	Tube I.D. / Part name	Material	Q'y	Component parts (inclusion)	Repair kits (inclusion)
1	Body	Aluminum alloy	1		
2	Rod cover	Aluminum alloy	1	●	
3	End cover	Aluminum alloy	1	●	
4	Piston rod	Stainless steel	1		
5	Piston	Aluminum alloy	1	●	
6	Rod packing	NBR	1	●	●
7	Snap ring	Stainless steel	1	●	
8	Cover ring	NBR	2	●	●
9	Piston bolt	Stainless steel	1	●	
10	Piston packing	NBR	1	●	●
11	Piston gasket	NBR	1	●	●
12	Cushion packing	NBR	2	●	●
13	Magnet ring	Magnet	1	●	
14	Wear ring	Resin	1	●	
15	Bush	Bearing alloy	1	●	
16	Washer	Carbon steel	1	●	
17	Snap ring	Spring steel	1	●	
18	Bolt	Carbon steel	2		

Order example

Component parts

Tube I.D.	Component parts
ø20	**CPL-MCKJQ-20(M)**
ø25	**CPL-MCKJQ-25(M)**

M: With magnet

Repair kits

Tube I.D.	Repair kits
ø20	**PSL-MCKJQ-20**
ø25	**PSL-MCKJQ-25**

F Rear flange

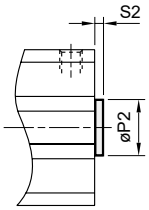

Code / Tube I.D.	P2 h9	S2
12	6	1.5
16	10	1.5
20	13	2
25	15	2
32	21	2
40	28	2

N2 Front mounting holes enlarged

(Applicable mounting method A)

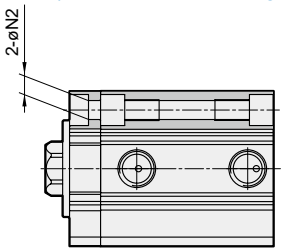

Code / Tube I.D.	N2
12	4.5
16	4.5
20	6.5
25	6.5
32	6.5

Plate mounting methods

⚠ Caution

Different mounting methods match different bolts and plate. Please confirm the mounting method before purchase.

* The plates and bolts are prepared by the customers.

Bolt specification

Tube I.D. / Mounting	ø12	ø16	ø20	ø25	ø32	ø40
A, C	M4×0.7	M4×0.7	M6×1.0	M6×1.0	M6×1.0	M6×1.0
B, D	M3×0.5	M3×0.5	M5×0.8	M5×0.8	M5×0.8	M5×0.8

A The plate is in front and the bolt is mounted from the front. For ø12~ø32, when selecting mounting option A, the order code must be N2 type.

Order example: **MCKJQ-12-20-25M-N2**

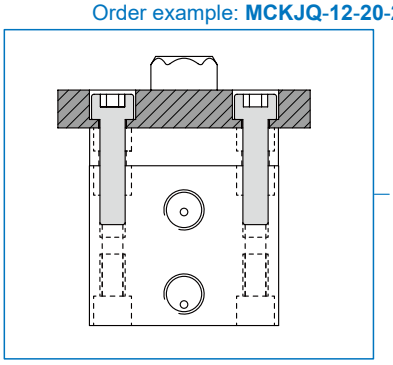

B The plate is in back and the bolt is mounted from the front.

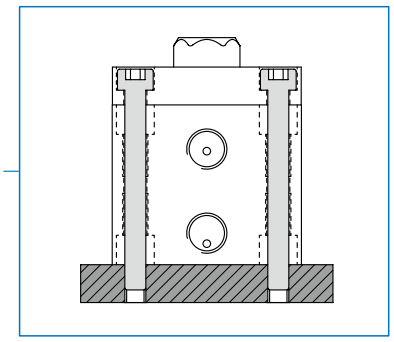

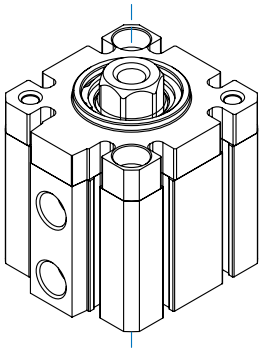

C The plate is in back and the bolt is mounted from the back.

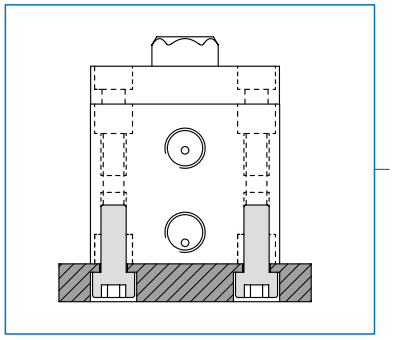

D The plate is in front and the bolt is mounted from the back.

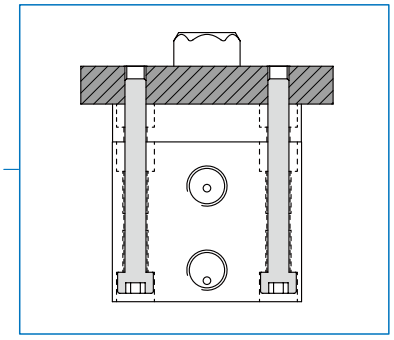

12

ø12, ø16

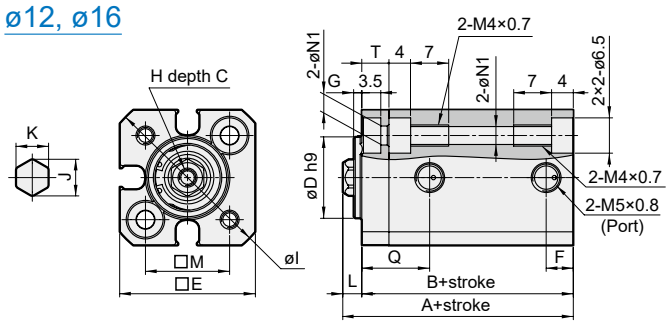

ø20, ø25

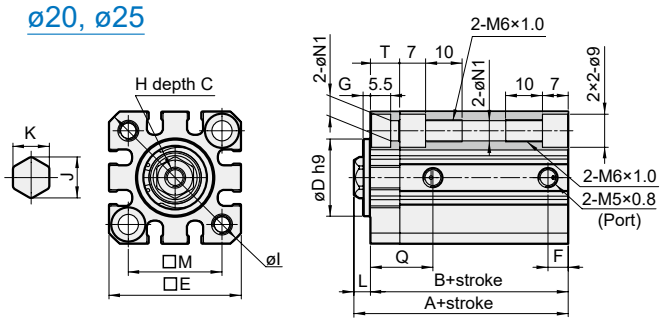

ø32

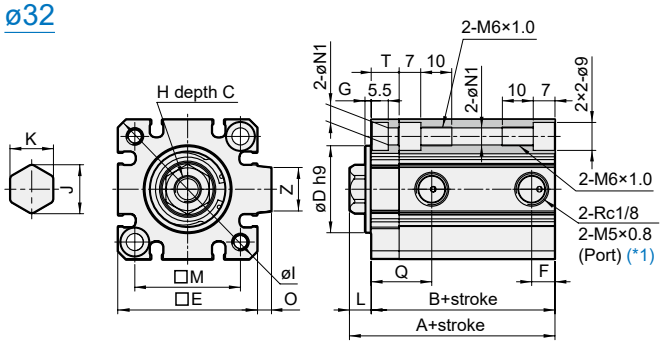

ø40

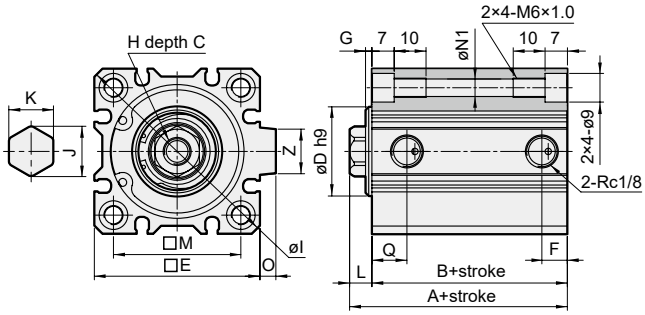

ø12, ø16

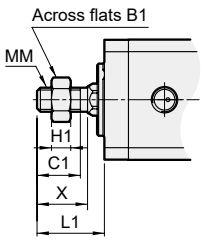

ø20, ø25

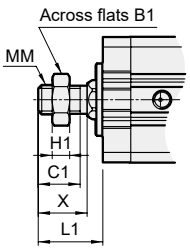

ø32

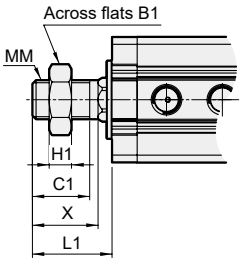

ø40

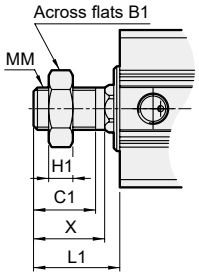

11 Male thread

Code / Tube I.D.	B1	C1	H1	L1*	MM	X
12	8	9	4	14	M5×0.8	10.5
16	10	10	5	15.5	M6×1.0	12
20	13	12	5	18.5	M8×1.25	14
25	17	15	6	22.5	M10×1.25	17.5
32	22	20.5	8	28.5	M14×1.5	23.5
40	22	20.5	8	28.5 (38.5)	M14×1.5	23.5

* ( ) Dimensions for piston rod extended "L" type.

Code / Tube I.D.	Standard stroke: Stroke range	Without magnet A	Without magnet B	Without magnet F	Magnet A	Magnet B	Magnet F	Long stroke: Stroke range	Long stroke A	Long stroke B	Long stroke F	C	D	E	F	G	H	I	J	K	L*2	M	N1	O	Q	T	Z
12	5~30	25.5	22	–	30.5	27	–	–	–	–	–	6	$15^{0}_{-0.043}$	25	5	1.5	M3×0.5	32	6.74	6	3.5	15.5	3.5	–	12.5	5	–
16	5~30	27	23.5	–	32	28.5	–	–	–	–	–	8	$19^{0}_{-0.052}$	29	5	1.5	M4×0.7	38	8.96	8	3.5	20	3.5	–	14	6.5	–
20	5~50	32	27.5	5.5	42	37.5	5.5	51~100	53.5	49	9	7	$21^{0}_{-0.052}$	36	–	2	M5×0.8	47	11.24	10	4.5	25.5	5.5	–	17	8	–
25	5~50	35.5	30.5	5.5	45.5	40.5	5.5	51~100	57	52	11	12	$22^{0}_{-0.052}$	40	–	2	M6×1.0	52	13.52	12	5	28	5.5	–	19	8	–
32	5~50	39	32	–	49	42	–	–	–	–	–	13	$28^{0}_{-0.052}$	45	7.5*1	2	M8×1.25	60	15.76	14	7	34	5.5	4.5	19.5*1	9	14
	51~100	49	42	–	49	42	–	–	–	–	–	13	$28^{0}_{-0.052}$	45	7.5*1	2	M8×1.25	60	15.76	14	7	34	5.5	4.5	19.5*1	9	14
40	5~50	36.5	29.5	–	46.5	39.5	–	–	–	–	–	13	$28^{0}_{-0.052}$	52	8	2	M8×1.25	70	15.76	14	7(17)	40	5.5	5	11	–	14
	51~100	46.5	39.5	–	46.5	39.5	–	–	–	–	–	13	$28^{0}_{-0.052}$	52	8	2	M8×1.25	70	15.76	14	7(17)	40	5.5	5	11	–	14

*1. Without magnet with stroke=5mm, Port size = M5×0.8, Q=20.5, F=5.5

*2. ( ) Dimensions for piston rod extended "L" type.